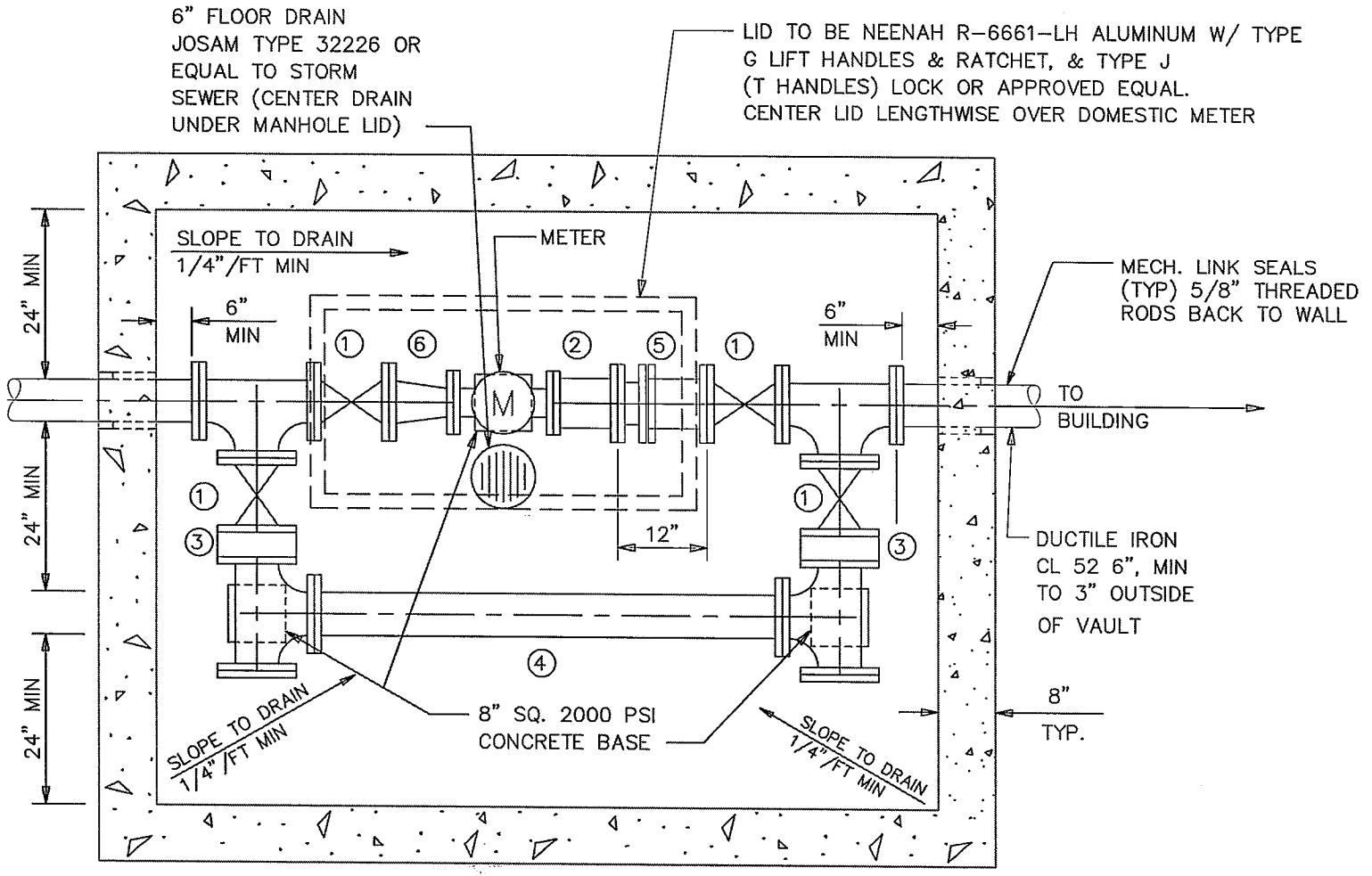

1. FLANGED INDICATOR GATE VALVE W/ HANDWHEEL
2. FLANGED SPOOL OR SPACER
3. FILLER FLANGE OR SPOOL PIECE AS RQUIRED
4. BY-PASS LINE TO BE SAME SIZE AS DOMESTIC LINE
5. FLANGED ADAPTER EQUAL TO DRESSER STYLE 128 WITH 2" NPT TAP & PLUG (TEST PORT)
6. FLANGED STRAINER

NOTE:

SEE CCSD STANDARD DWGS W4.5 & W4.6 FOR WATER SYSTEM CHAMBER DETAILS

NO SCALE

CCSD

CLERMONT COUNTY
SEWER DISTRICT

APPROVED _____
DATE _____

3" & LARGER STANDARD METER PIT ARRANGEMENT

DRAWING NO. W4.3