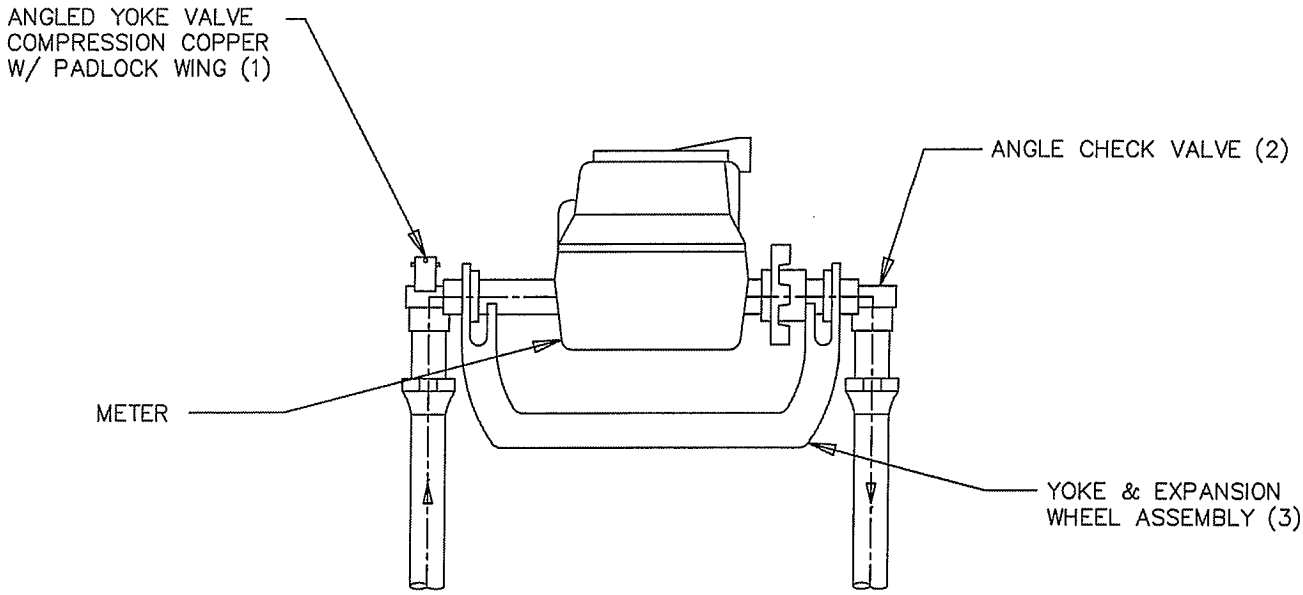

$\frac{5}{8}$" X $\frac{3}{4}$" & 1" METERS

NOTE:

METERS SHALL BE PURCHASED FROM CCSD

METER SIZE	1	2	3
5/8" X 3/4"	FORD AV94-323-WG OR EQUAL	FORD HA94 -323-G OR EQUAL	YOKE - FORD Y502, WHEEL-EC-23 OR EQUAL
1"	FORD AV94-444-WG OR EQUAL	L94-44-G OR EQUAL	YOKE-FORD Y504, WHEEL-EC4 OR EQUAL

NO SCALE

CCSD	CLERMONT COUNTY SEWER DISTRICT APPROVED _____ DATE _____	5/8" X 3/4" & 1" DOMESTIC METERS ASSEMBLY	DRAWING NO. W3.2