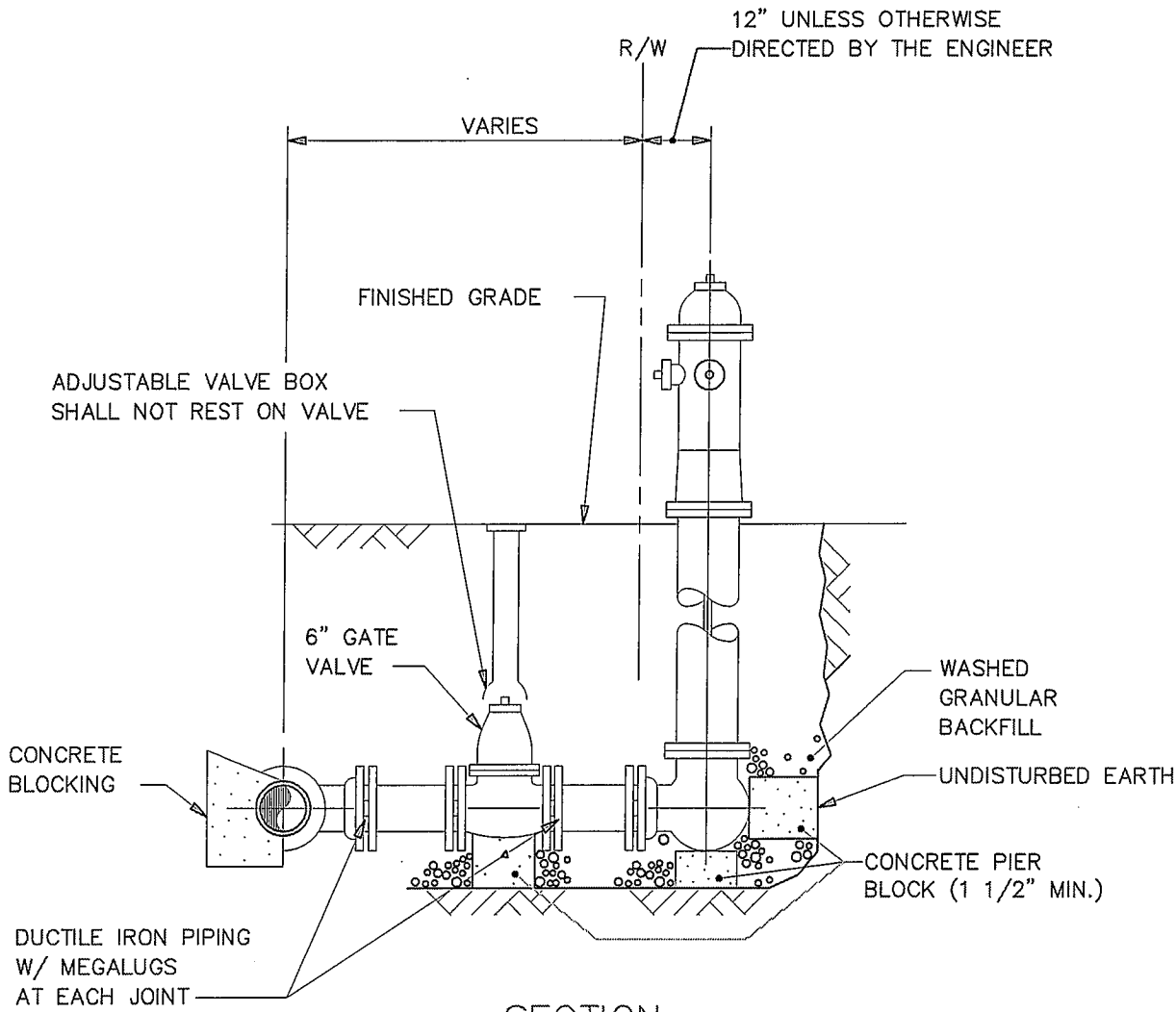

SECTION

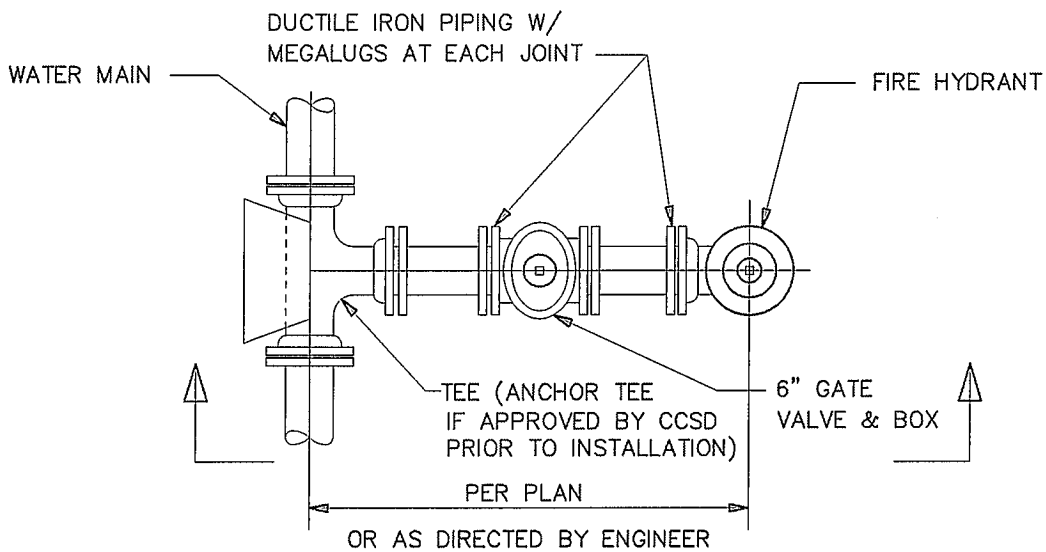

PLAN

NO SCALE

CCSD	CLERMONT COUNTY SEWER DISTRICT APPROVED _____ DATE _____	FIRE HYDRANT LAYOUT & ASSEMBLY	DRAWING NO. W2.1