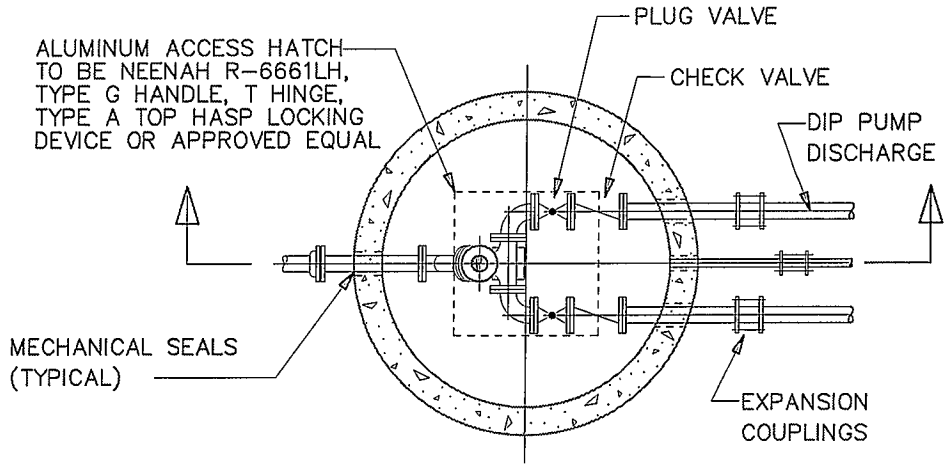

PLAN

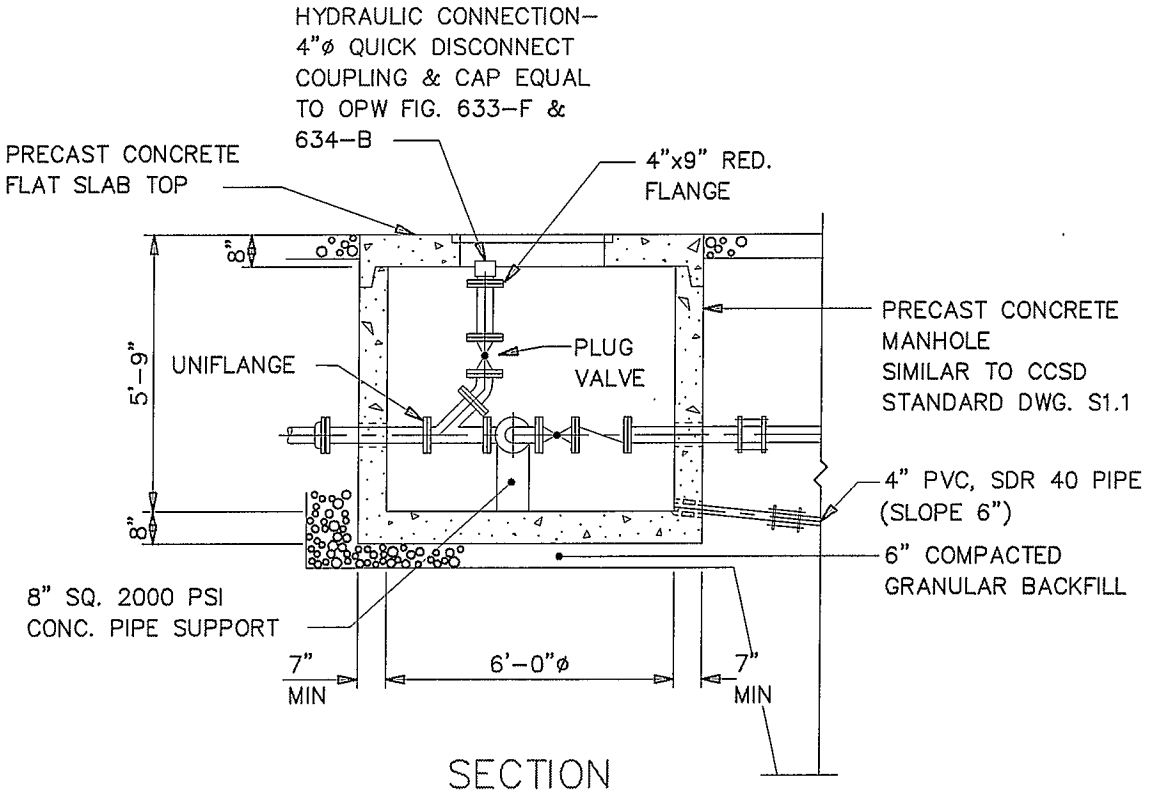

SECTION

NO SCALE

CCSD	CLERMONT COUNTY SEWER DISTRICT APPROVED _____ DATE _____	VALVE CHAMBER DETAIL	DRAWING NO. S5.1.3