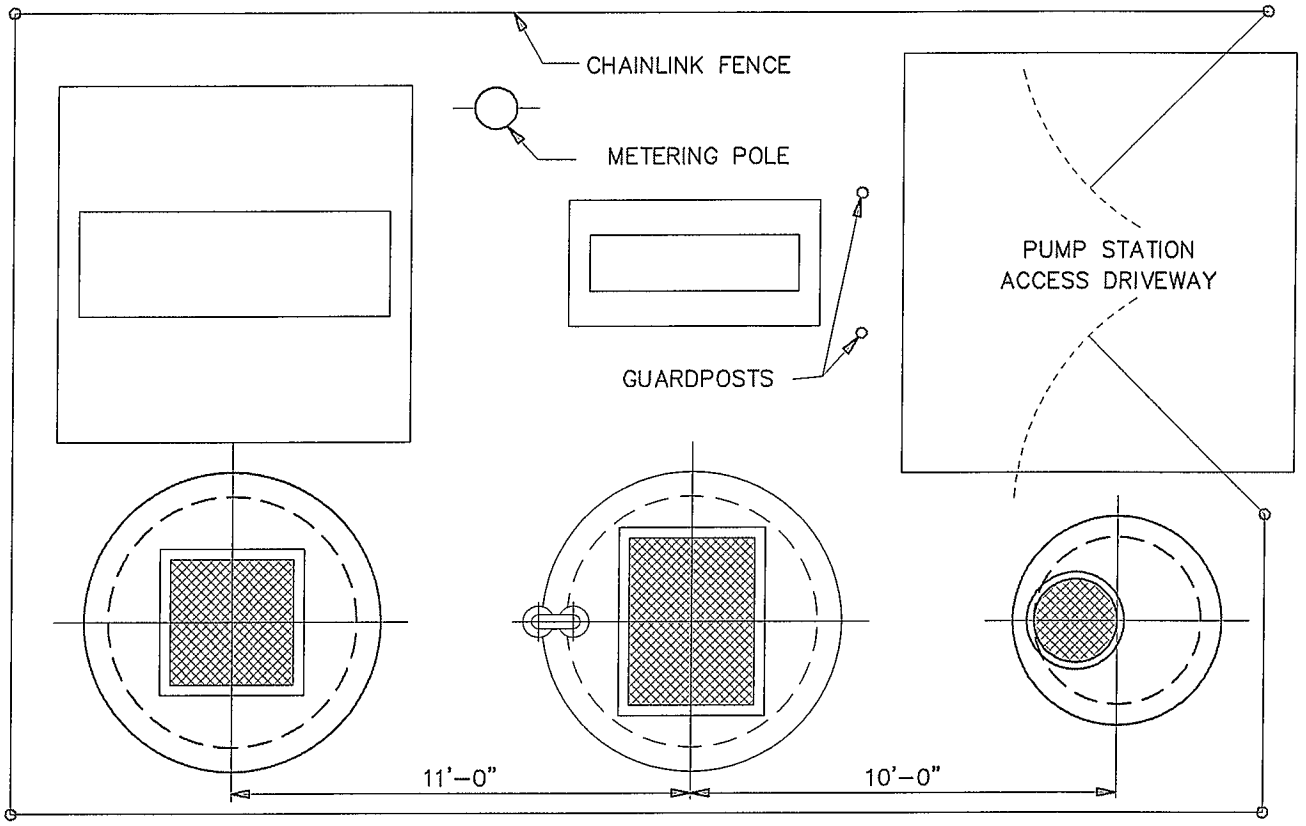

TOP PLAN

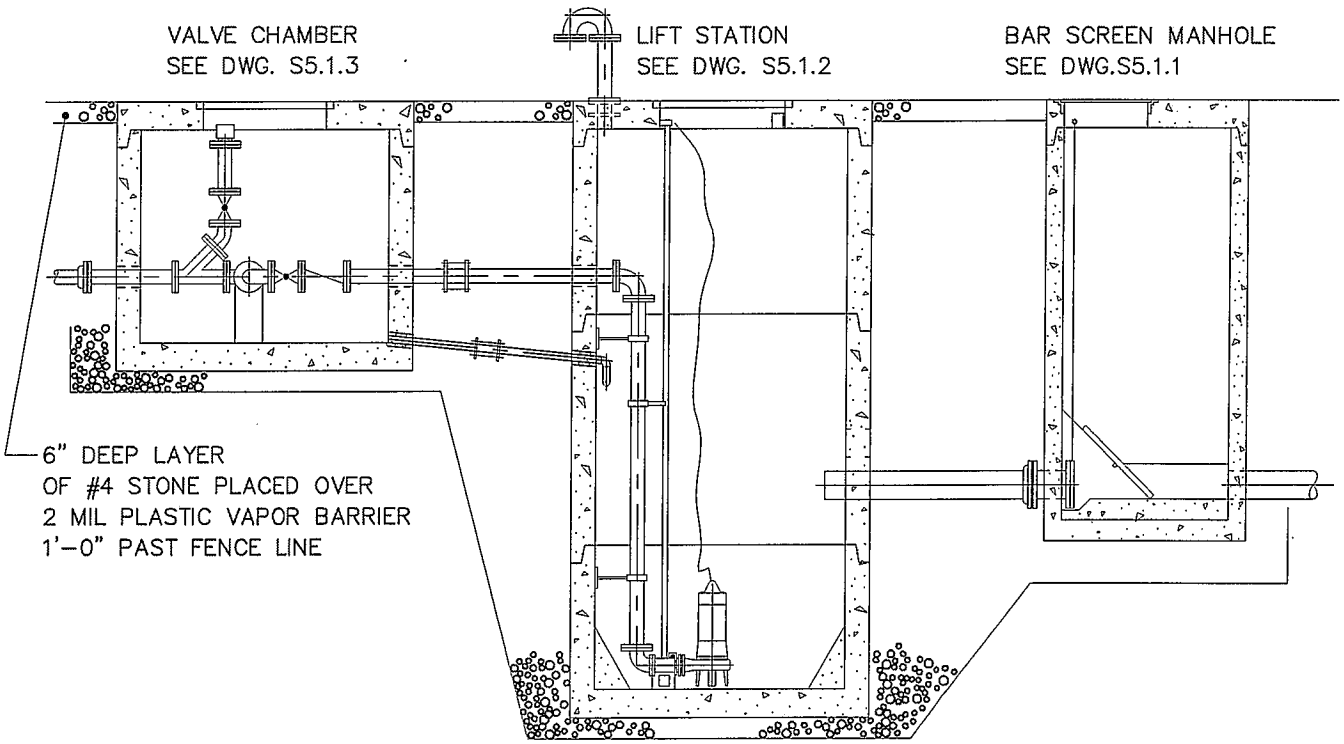

SECTION

NO SCALE

CCSD	CLERMONT COUNTY SEWER DISTRICT APPROVED _____ DATE _____	LIFT STATION LAYOUT	DRAWING NO. S5.1